Bottom Bracket Repair / Replacement

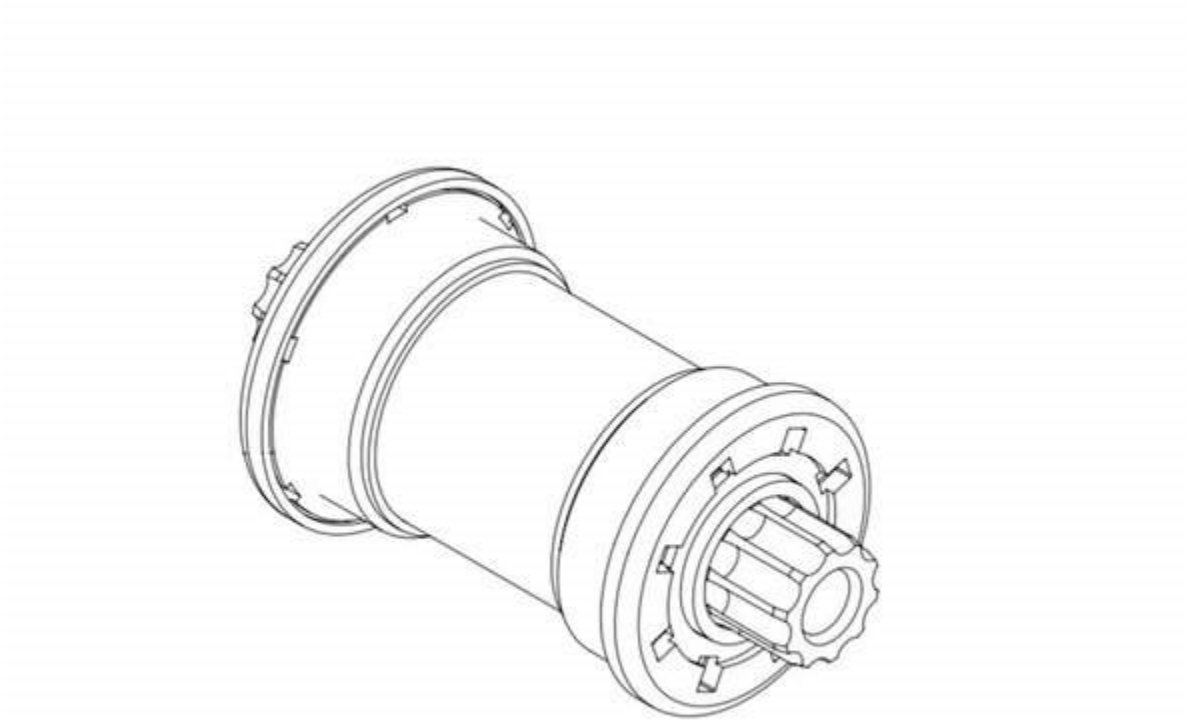

Difficulty	Difficult
Steps	14
Time Required	10 - 30 minutes

Introduction

This guide is to help troubleshoot potential bottom bracket issues in the field.

PW: peloton

Tools

- Race Pliers
- Phillips head Screwdriver
- Flat head Screwdriver
- 8 mm Allen Wrench
- 3 mm Allen Wrench
- Torque Wrench
- 5 mm Allen Wrench
- Truvativ ISIS Drive Bottom Bracket Tool 1/2" Drive

This document is provided for instructional purposes only. Field Tech Fitness Solutions may not own or claim rights to this content. If you are the rights holder and would like this document removed, please contact us at support@fieldtechfitness.com.

Step 1 - Failure Mode – Knocking / Thumping Noise

A Knocking or thumping noise that can be heard or felt is an example of a noise that might be a result of a loose bottom bracket.

Step 2 - Failure Mode - Clicking Noise

A clicking or ticking is another example of a noise that could be due to a loose bottom bracket.

Step 3 - Check the Crank Pulley Screws

- Before removing any components of the bike, check the tightness of the 5 crank pulley bolts using a 5mm allen key (see video for the location of these bolts).
- **If these bolts are loose, it can lead to clicking noises that are very similar to that of a loose bottom bracket**
- If these bolts are loose, try tightening them using a 5mm allen key, and seeing if that resolves the clicking noise the member is experiencing. If it does not resolve the issue, continue with the rest of the troubleshooting steps in this guide.

Step 4 - Remove the outer belt guard

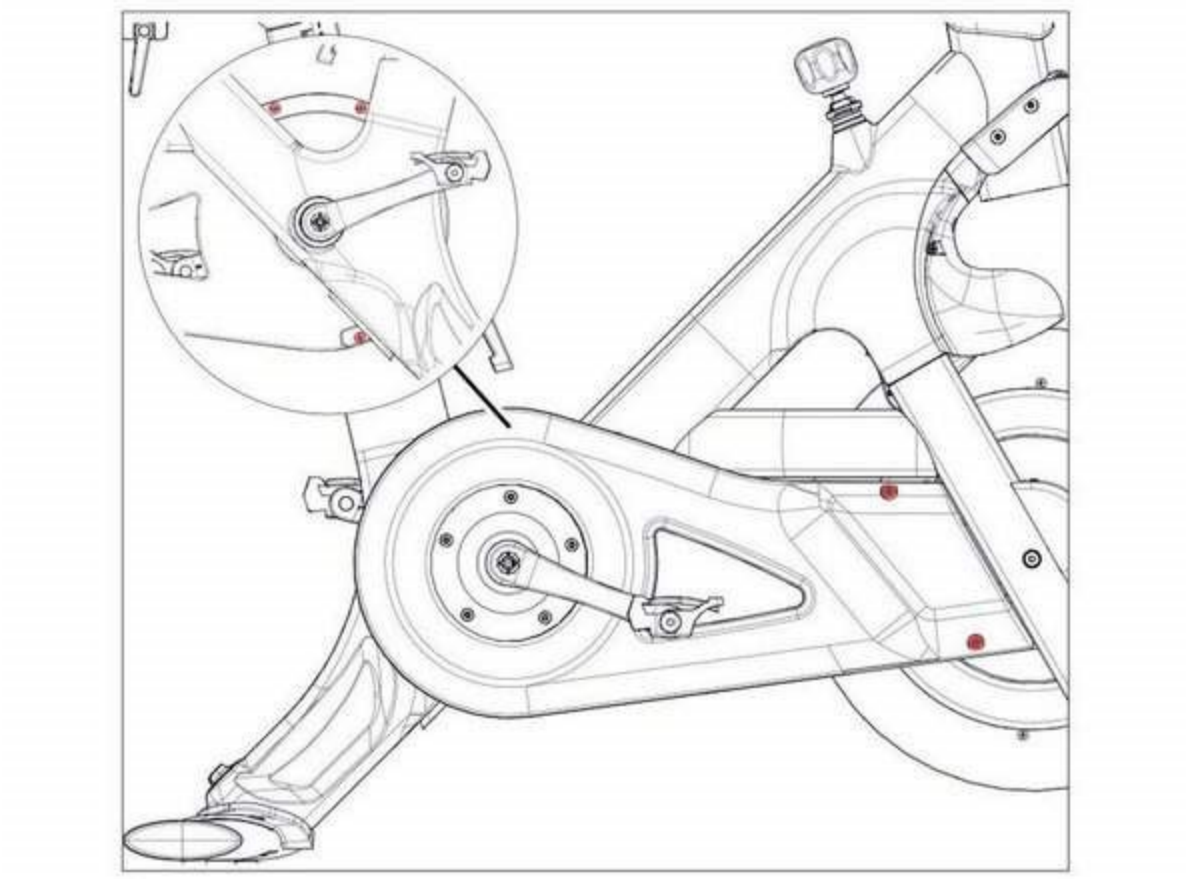

- Use a Phillips head screwdriver to remove the five bolts holding the outer belt guard in place.
- Two bolts are located at the front of the belt guard.
- Three bolts are located at the back of the belt guard and are accessible from the left side of the bike.
- Set the bolts aside.

Step 5 - Remove the bolts from the crank arm



- Use an 8mm Allen wrench to remove the crank arm bolt and washers.
- The bolt is secured with Loctite, and will require extra force to loosen.

Step 6 - Remove the crank arms



- Take a crank puller and unscrew the bushing so that about 3/4" (19mm) of threads between the bushing and the handle are exposed.



- Thread the bushing into the hole at the center of the crank arm until it stops.
- Rotate the crank puller handle clockwise until the crank arm comes off the bike.
- **The right crank arm will come off with the orange pulley.**
- Unscrew the crank puller from the crank arm and set the crank arms and pulley aside.

Step 7 - Inspect the bottom bracket area



- Look for any immediate cosmetic or mechanical damage to the bottom bracket or other parts in the area.
- For example: damage to the outer belt guard from contact with the drive pulley.
- **If there is any cosmetic or mechanical damage to the bottom bracket, or other parts, those parts should be replaced.**



- Check to see if the paint lines of the bottom bracket have been shifted, as this is an indication the bottom bracket has loosened.



- Check to see if there is a gap on the right side of the bike between the bottom bracket and the bottom bracket housing. This may indicate that the bottom bracket is either loose, or was installed incorrectly.
- **Regardless of the positioning of the bottom bracket, the component may still be loose, and should be removed.**

Step 8 - Prep the bottom bracket for removal



- Remove the rubber ring on the bottom bracket either using your hands or a flat head screw driver.
- **Be careful not to scratch the bike if using a screwdriver.**



- Remove the lock ring on the left side of the bottom bracket by using race pliers to twist the ring counter clockwise. Keep the pliers parallel to the bike, as shown.

Step 9 - Remove the bottom bracket

- Remove the cap on the left side of the bottom bracket using the ISIS drive bottom bracket tool as shown in the video.
- Remove the elongated section of the bottom bracket from the right side using the ISIS drive bottom bracket tool as shown in the video.
- The right side of the bottom bracket is reverse threaded (Turn clockwise to loosen).

- **Apply pressure towards the bottom bracket with your hand to keep the ISIS tool in place.**
- **You must remove THE ENTIRE bottom bracket before retightening (both the left side and the right side).**

Step 10 - Reinstall / Replace the Bottom Bracket

- Once the bottom bracket is completely removed, inspect the part for any cosmetic or mechanical issues. As noted in step 4, if there is any damage, the bottom bracket must be completely replaced. If there is no damage, the part can be reused.
- Hand thread the long part of the bottom bracket into the right side of the housing, then tighten into the housing by using the ISIS tool. Tighten to 54 ft. - lbs.
- The right side of the bottom bracket is reverse threaded (counter clockwise to tighten).
- Hand thread the bottom bracket cap into the left side of the housing, then tighten into the housing by using the ISIS tool. Tighten to 54 ft. - lbs
- **Apply pressure towards the bottom bracket with your hand to keep the ISIS tool in place.**
- Then using race head pliers, reinstall the lock ring on the left side of the bottom bracket. Then reinstall the dust cover.

Step 11 - Add the new belt to the flywheel

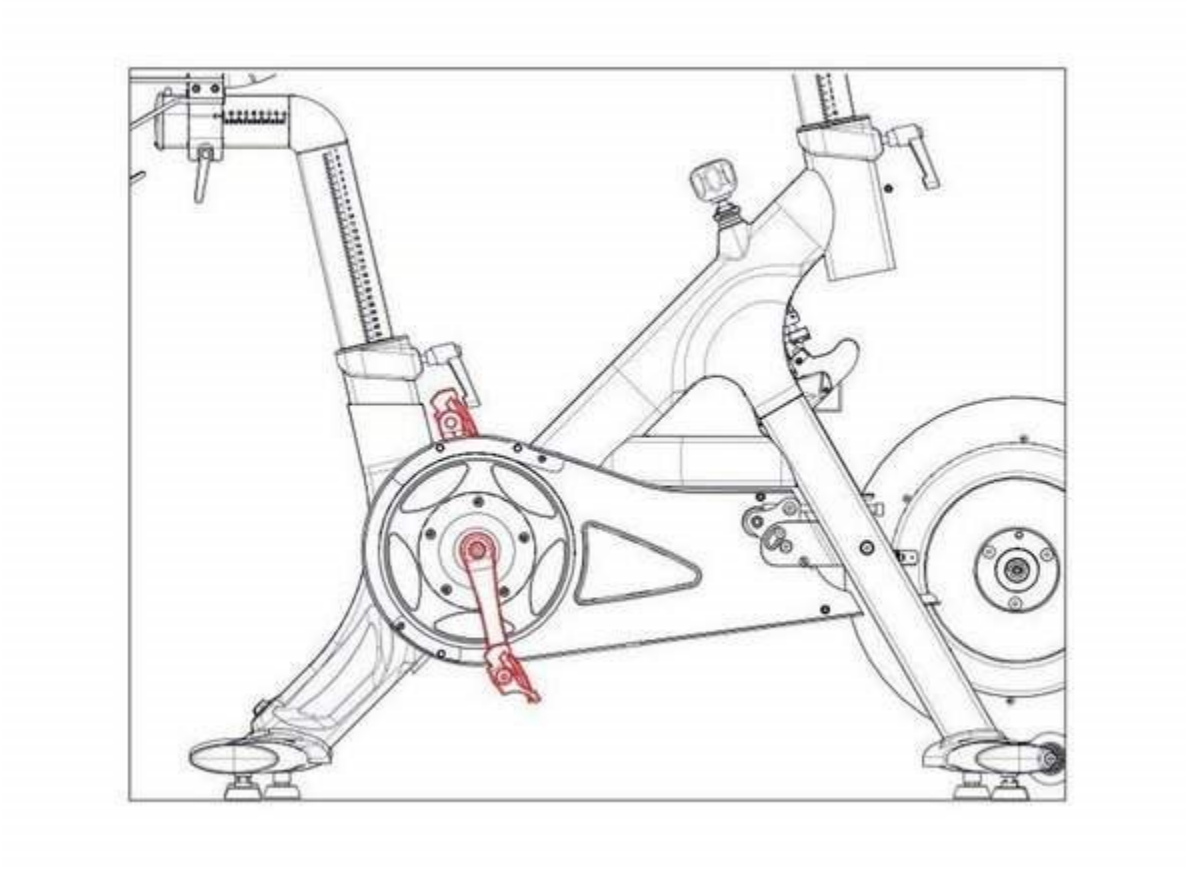

- Orient the crank arms so they are rotated 180 degrees from each other and insert them into the bottom bracket interface.



- When the crank arms are fully seated in the bottom bracket, secure it using the 8mm Allen wrench and the bolt and washers.
- Tighten the bolt to 43 lb-ft (58.3 N m) of torque.

Step 12 - Return the Belt to the Pulley



- Fit the belt around the orange pulley, starting at the top. You won't be able to get it all the way around, but fit as much of the belt into the pulley's grooves as you can.
- Slowly rotate the crank arm counterclockwise, pushing the loose part of the belt onto the pulley as you go. The belt should track onto the pulley.
- If you're having trouble, try turning the resistance knob all the way counterclockwise.

Step 13 - Reinstall the Outer Belt Guard

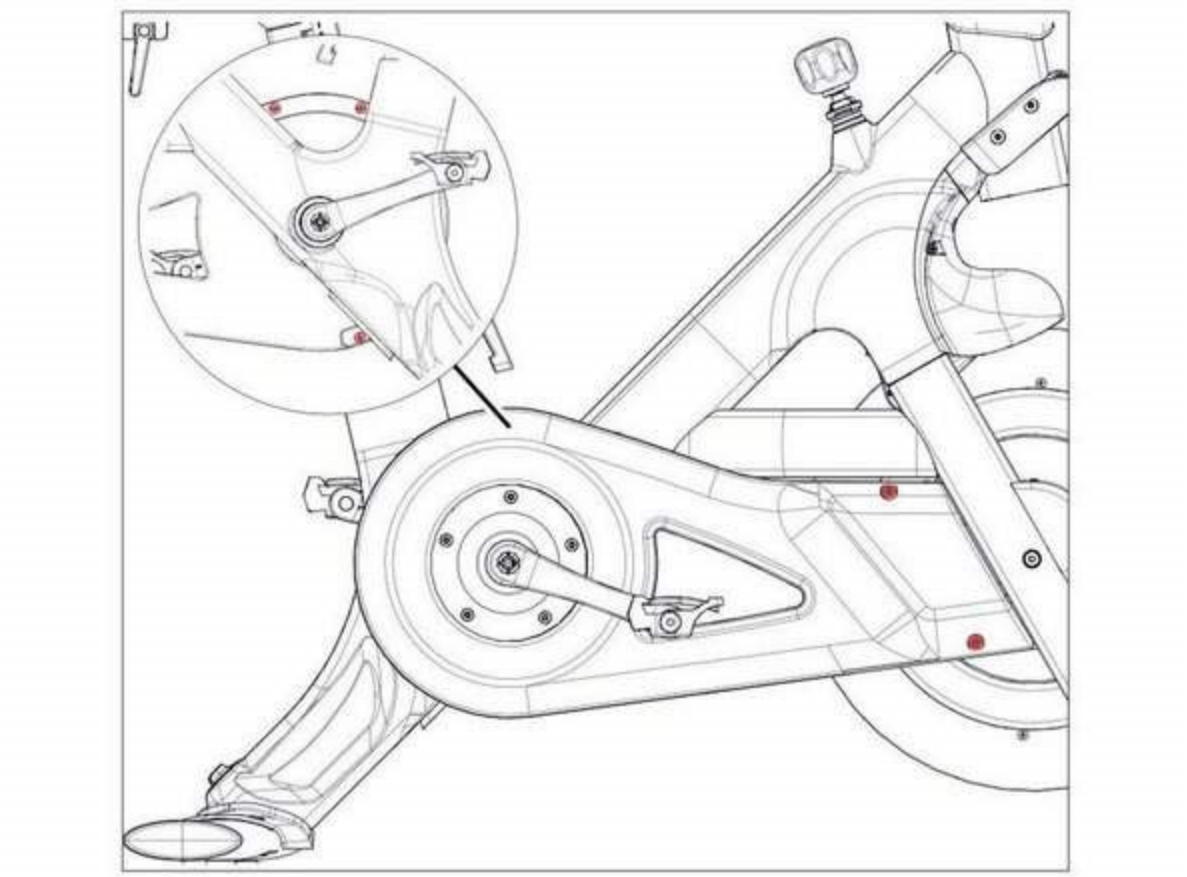

- Line the outer belt guard up over the pulley and belt. You may have to rotate the right crank arm to fit the belt guard into place.
- Secure the belt guard using the Phillips head screwdriver and the five bolts you removed in step 3.
- The two longer bolts go in the holes at the front of the belt guard. The three shorter bolts go in the holes at the back of the belt guard, accessible from the left side of the bike.

Step 14 - Ride Test

- Turn the resistance knob far enough clockwise to allow you to pedal with a high degree of resistance.
- Pedal for about a minute, listening for any abnormal noises. If abnormal noises are still present, a full frame swap may be required if the noises can't be accurately diagnosed.