Belt Alignment

2 of 32

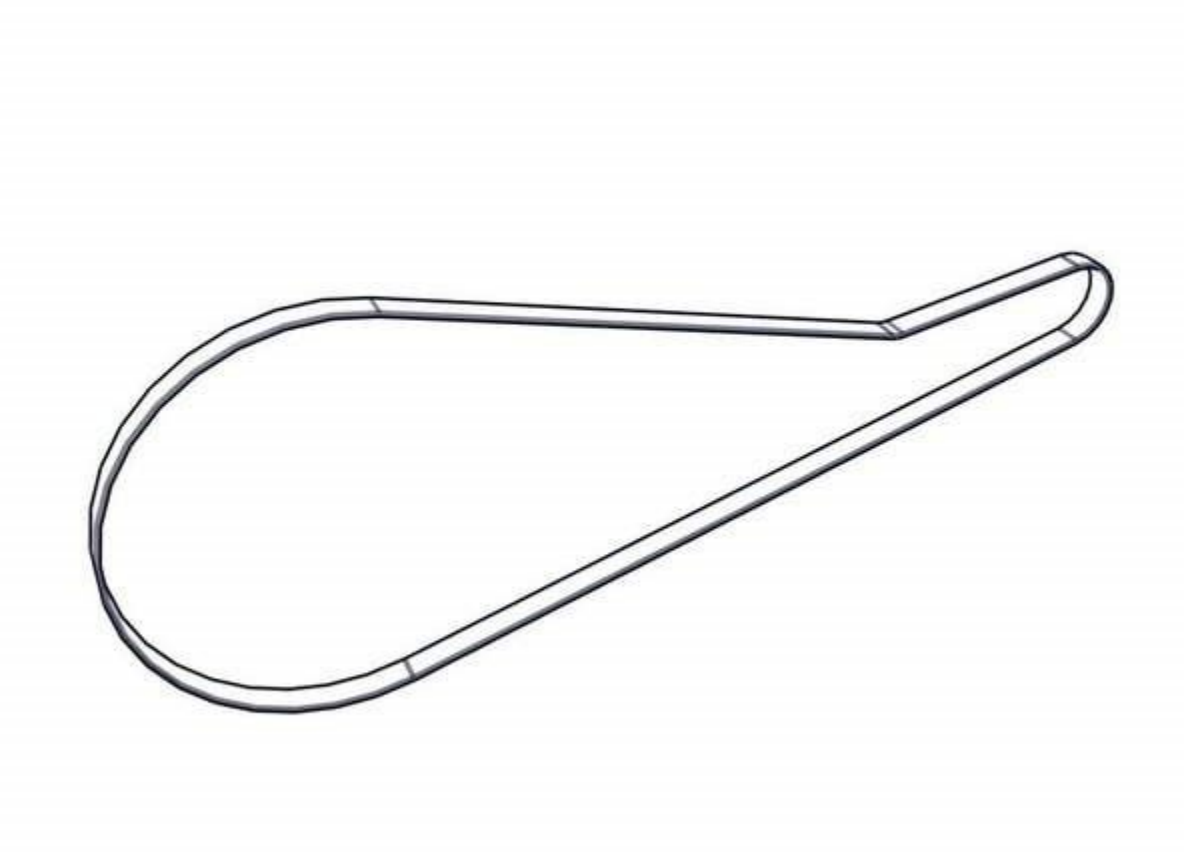

Difficulty	Moderate
Steps	9
Time Required	5 - 10 minutes

Introduction

A regular swishing noise as the user rides indicates that the belt is brushing against another part of the bike. To fix this, re-seat the belt in the grooves of the pulley and the hub and axle assembly. If you notice that the belt is torn, or if you find black dust accumulating inside the belt guard, you will need to completely replace the belt.

Tools

- Phillips head screwdriver
- 8mm Allen Wrench
- Nylon Pry Bar

Step 1 - Remove the outer belt guard

This document is provided for instructional purposes only. Field Tech Fitness Solutions may not own or claim rights to this content. If you are the rights holder and would like this document removed, please contact us at support@fieldtechfitness.com.

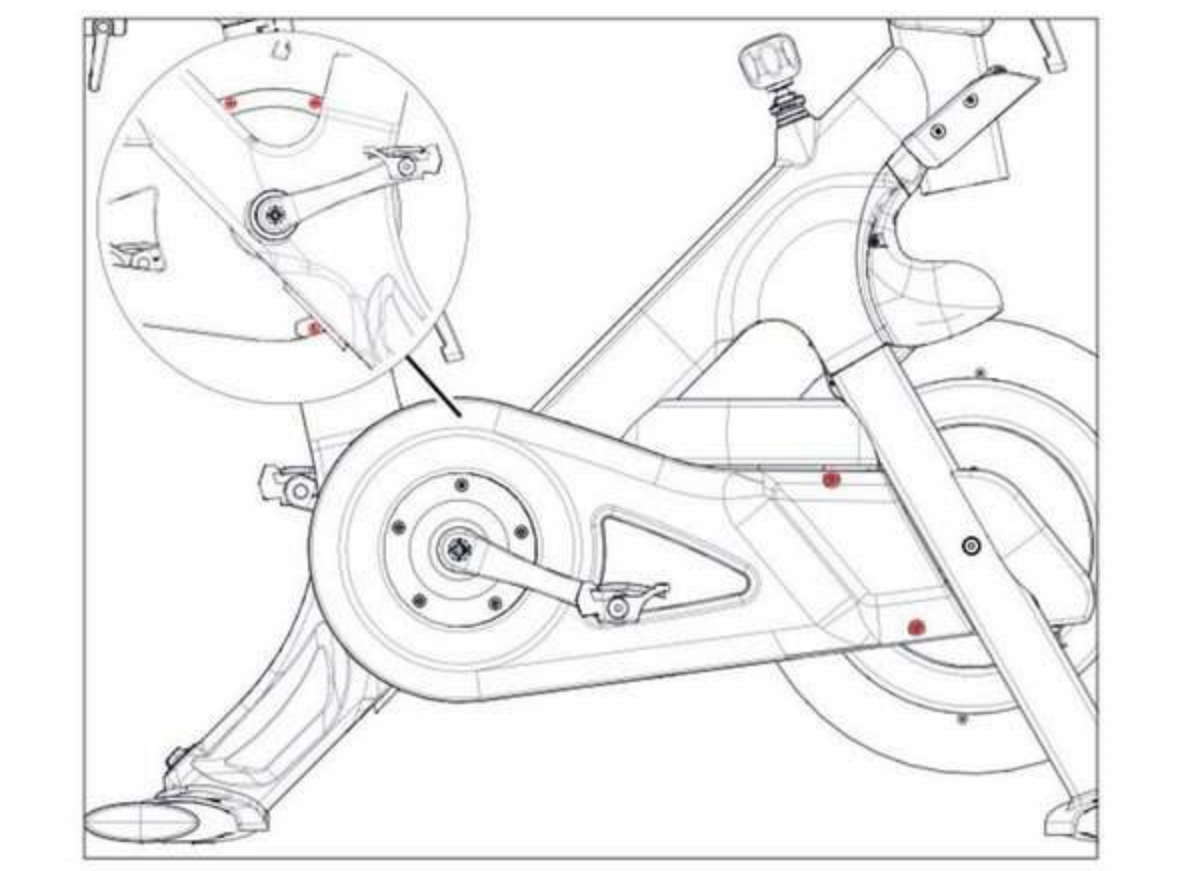

- Use a Phillips head screwdriver to remove the five bolts holding the outer belt guard in place.
- Two bolts are located at the front of the belt guard. Access the three rear bolts from the left side of the bike.
- Set the bolts aside.

Step 2 - Remove the belt from the pulley



- **Keep hands away from moving pulley. If your hands are caught between the belt and pulley you could be seriously injured.**
- Insert a bike tire lever between the belt and the top of the pulley where they meet.
- Hold the tire lever at a steep angle, pushing the bottom half towards the pulley.
- Slowly rotate the crank arm counterclockwise, continuing to push on the lever. The belt should peel off of the pulley.

Step 3 - Remove front belt guard



- The front belt guard is located on the right side of the flywheel. Use a Phillips head screwdriver to remove the screw at the top of the front belt guard. Set the screw aside.
- The front belt guard is now held in place only by a plastic rivet on the underside. Pry it free with your fingers and set the rivet and the belt guard aside.

Step 4 - Check belt alignment on the hub



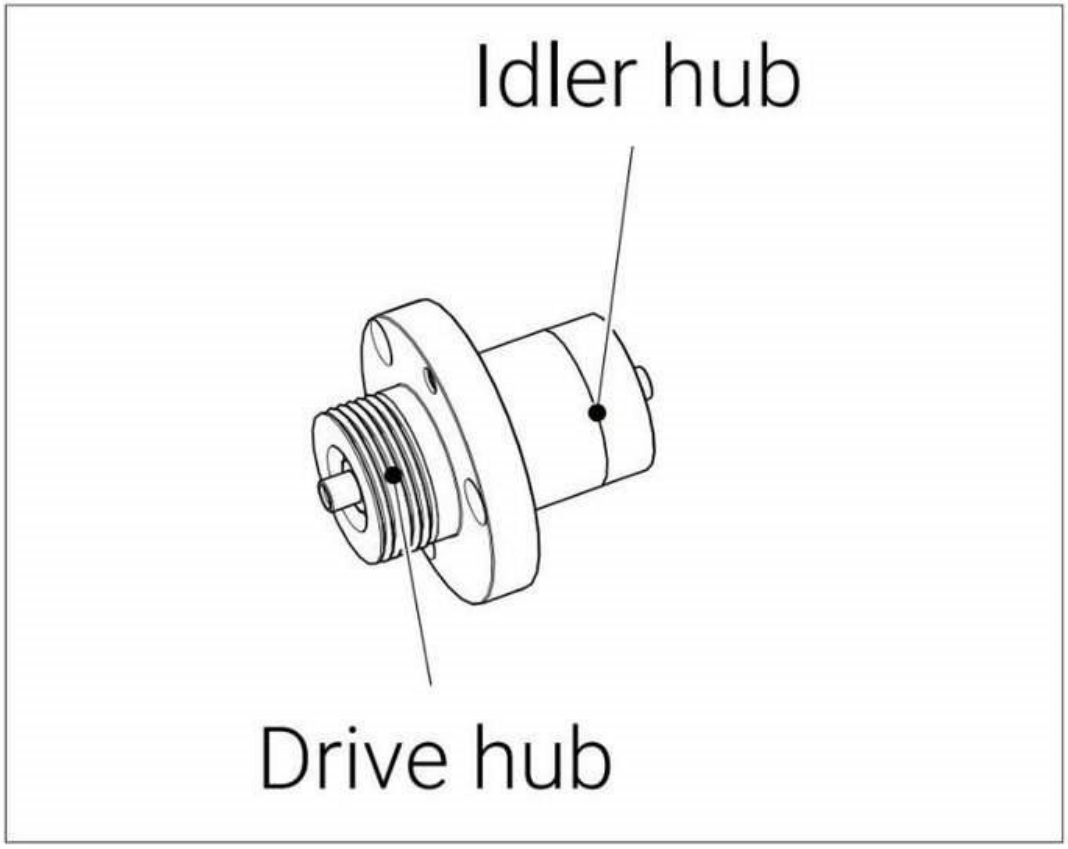

- The other end of the belt loops around the drive hub, at the right side of the front fork. Make sure the belt sits in the right place on the hub.
- When it is correctly aligned, one groove in the drive hub will be visible at the right side of the belt.

Step 5 - Return the belt to the pulley



- Fit the belt around the orange pulley, starting at the top. You won't be able to get it all the way around, but fit as much of the belt into the pulley's grooves as you can.
- Slowly rotate the crank arm counterclockwise, pushing the loose part of the belt onto the pulley as you go. The belt should track onto the pulley.
- If you're having trouble, try turning the resistance knob all the way counterclockwise.

Step 6 - Check/Adjust the Belt Tension



Check belt tension using Gates 507C or 508C Acoustic Gauge – tension must be between 82-92 Hz.



- If you don't have the tension gauge, use the Carbon Drive smartphone app by Gates to check the tension as shown (app available on both iOS and Android).
- Be sure there are no obstructions around your phone's microphone while testing (for example: a bulky/waterproof phone case).
- **When checking the tension, use your finger to strum the bottom section of the belt.**



- If needed, adjust the Belt tension by using an 8mm Allen key to turn the hex-socket adjustment screw in the Idler Pulley Assembly (right side of the Flywheel).
- Recheck/Readjust tension as needed.

Step 7 - Reinstall the front belt guard

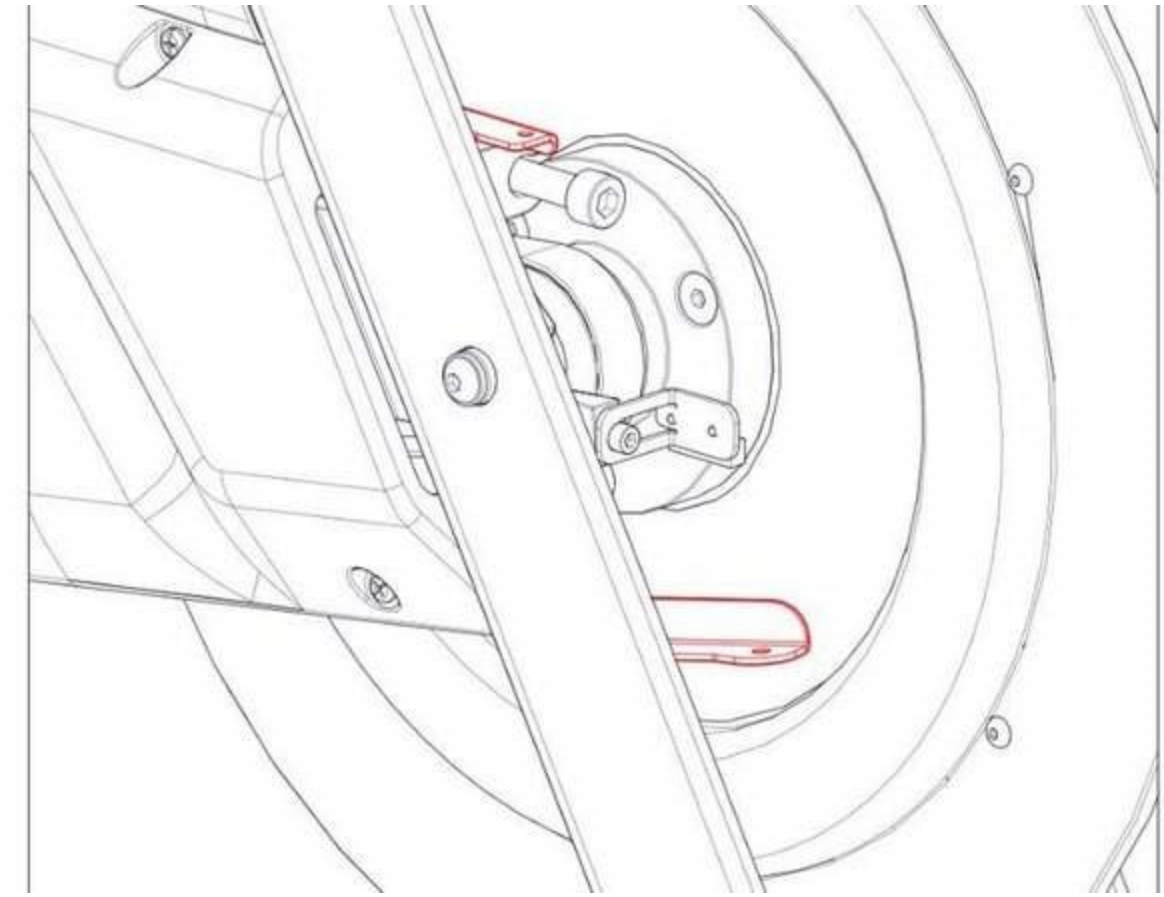

- The mounts for the front belt guard sit above and below the cadence sensor. Line the belt guard up against the right post of the front fork, making sure it doesn't pinch the cadence sensor wire.
- Secure the front belt guard to the top mount using the Phillips head screwdriver and the bolt you removed in step 3.
- Take the plastic rivet you removed in step 3 and push it into the bottom hole in the front belt guard to secure it to the bottom mount.

Step 8 - Check belt alignment

- Ride the bike for about a minute, listening for any noises coming from the belt. If you are still hearing a noise, contact Peloton Support for additional help.
- If the belt appears to be running smoothly, you can now reinstall the outer belt guard.

Step 9 - Reinstall the outer belt guard



- Line the outer belt guard up over the pulley and belt. You may have to rotate the right crank arm to fit the belt guard into place.
- Secure the belt guard using the Phillips head screwdriver and the five bolts you removed in step one.
- The two longer bolts go in the holes at the front of the belt guard.
- The three shorter bolts go in the holes at the back of the belt guard, accessible from the left side of the bike.